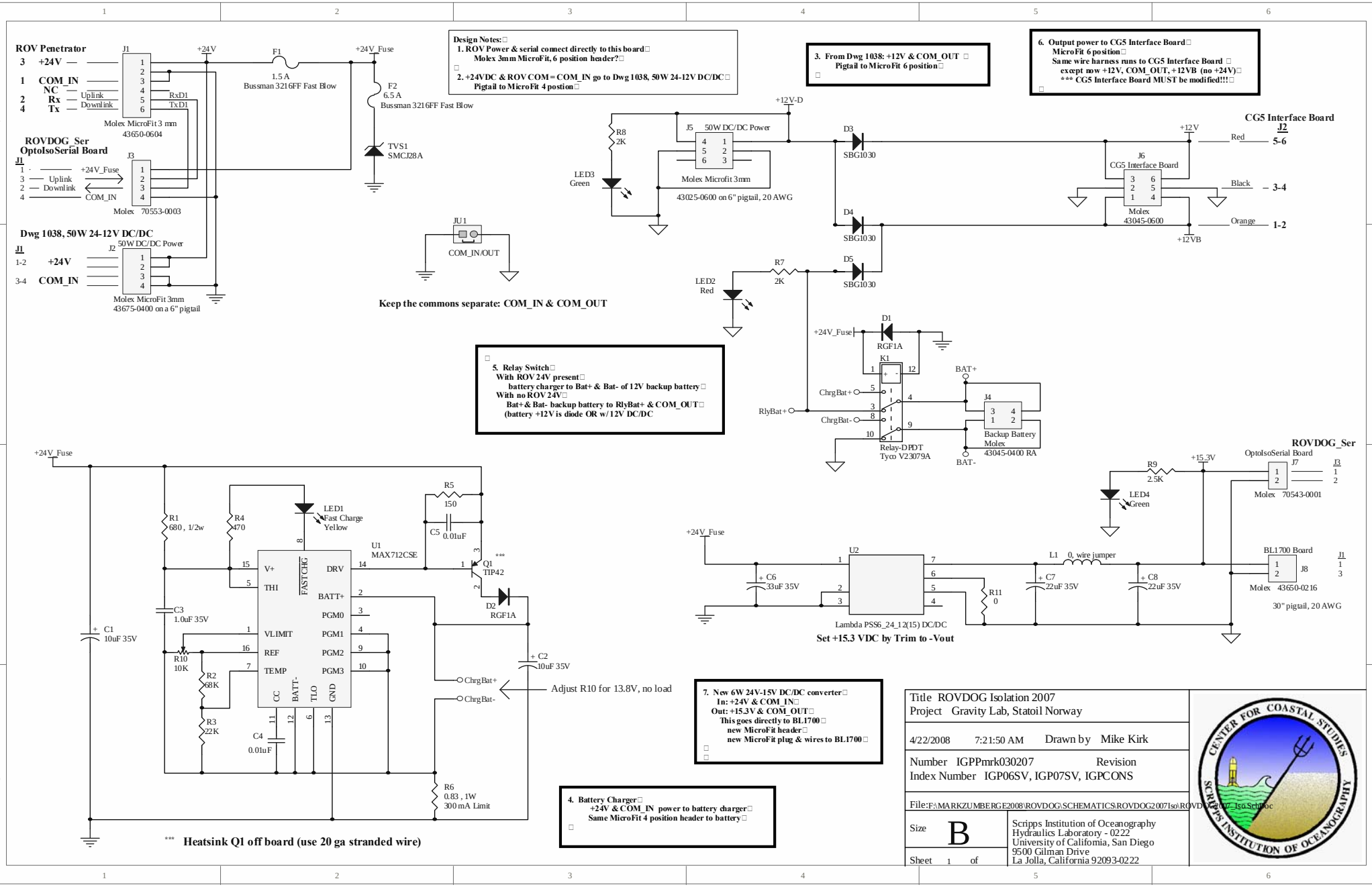
ROV Penetrator
3 +24V
1 COM_IN
NC
2 Rx Uplink
4 Tx Downlink
J1
Molex MicroFit 3 mm
43650-0604
+24V
F1
1.5 A
Bussman 3216FF Fast Blow
+24V_Fuse
F2
6.5 A
Bussman 3216FF Fast Blow
TVS1
SMCJ28A
RxD1
TxD1
ROVDOG_Ser
OptoIsoSerial Board
J1
1
3 Uplink
2 Downlink
4
+24V_Fuse
COM_IN
J3
Molex 70553-0003
Dwg 1038, 50W 24-12V DC/DC
J1
1-2 +24V
3-4 COM_IN
J2
50W DC/DC Power
Molex MicroFit 3mm
43675-0400 on a 6" pigtail
Design Notes:
1. ROV Power & serial connect directly to this board
Molex 3mm MicroFit, 6 position header?
2. +24VDC & ROV COM = COM_IN go to Dwg 1038, 50W 24-12V DC/DC
Pigtail to MicroFit 4 postion
JU1
COM_IN/OUT
Keep the commons separate: COM_IN & COM_OUT
3. From Dwg 1038: +12V & COM_OUT
Pigtail to MicroFit 6 position
6. Output power to CG5 Interface Board
MicroFit 6 position
Same wire harness runs to CG5 Interface Board
except now +12V, COM_OUT, +12VB (no +24V)
*** CG5 Interface Board MUST be modified!!!
+12V-D
R8
2K
LED3
Green
J5 50W DC/DC Power
Molex Microfit 3mm
43025-0600 on 6" pigtail, 20 AWG
D3
SBG1030
D4
SBG1030
D5
SBG1030
R7
2K
LED2
Red
CG5 Interface Board
J2
+12V
Red 5-6
J6
CG5 Interface Board
Black 3-4
Molex
43045-0600
Orange 1-2
+12VB
5. Relay Switch
With ROV 24V present
battery charger to Bat+ & Bat- of 12V backup battery
With no ROV 24V
Bat+ & Bat- backup battery to RlyBat+ & COM_OUT
(battery +12V is diode OR w/12V DC/DC
+24V_Fuse
D1
RGF1A
K1
BAT+
ChrgBat+
RlyBat+
ChrgBat-
J4
Backup Battery
Molex
43045-0400 RA
Relay-DPDT
Tyco V23079A
BAT-
+24V_Fuse
R1
680, 1/2w
R4
470
LED1
Fast Charge
Yellow
U1
MAX712CSE
R5
150
C5
0.01uF
Q1
TIP42
***
D2
RGF1A
V+
THI
FAST CHG
DRV
BATT+
PGM0
PGM1
PGM2
PGM3
VLIMIT
REF
TEMP
CC
BATT-
TLO
GND
C3
1.0uF 35V
C1
10uF 35V
R10
10K
R2
68K
R3
22K
C4
0.01uF
R6
0.83, 1W
300 mA Limit
C2
10uF 35V
ChrgBat+
ChrgBat-
Adjust R10 for 13.8V, no load
*** Heatsink Q1 off board (use 20 ga stranded wire)
+24V_Fuse
C6
33uF 35V
U2
Lambda PSS6_24_12(15) DC/DC
R11
0
L1 0, wire jumper
C7
22uF 35V
C8
22uF 35V
R9
2.5K
+15.3V
LED4
Green
ROVDOG_Ser
OptoIsoSerial Board
J7
J3
Molex 70543-0001
BL1700 Board
J8
J1
Molex 43650-0216
30" pigtail, 20 AWG
Set +15.3 VDC by Trim to -Vout
7. New 6W 24V-15V DC/DC converter
In: +24V & COM_IN
Out: +15.3V & COM_OUT
This goes directly to BL1700
new MicroFit header
new MicroFit plug & wires to BL1700
4. Battery Charger
+24V & COM_IN power to battery charger
Same MicroFit 4 position header to battery
Title ROVDOG Isolation 2007
Project Gravity Lab, Statoil Norway
4/22/2008 7:21:50 AM Drawn by Mike Kirk
Number IGPPmrk030207 Revision
Index Number IGP06SV, IGP07SV, IGPCONS
File:F:\MARKZUMBERGE2008\ROVDOG\SCHEMATICS\ROVDOG2007Iso\ROVDOG2007_Iso.Schdoc
Size B
Sheet 1 of
Scripps Institution of Oceanography
Hydraulics Laboratory - 0222
University of California, San Diego
9500 Gilman Drive
La Jolla, California 92093-0222
CENTER FOR COASTAL STUDIES
SCRIPPS INSTITUTION OF OCEANOGRAPHY